ver 28 October 2022

Extruded, Forged or Cold-Drawn Brasses for Miniature Valves

A look at the brasses used to make miniature ball and check valve bodies

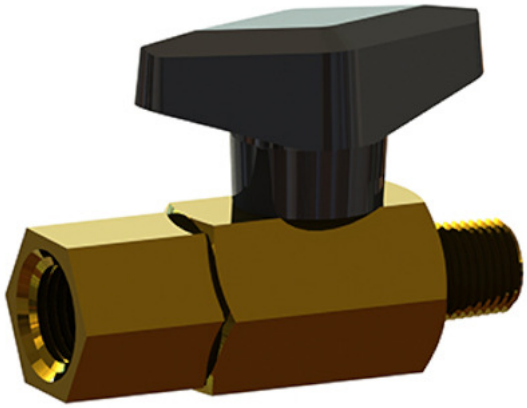

A BBV series two-way brass ball valve from ISM.

Brass miniature valves are useful, reliable and economical

Wrought brasses, alloys of copper and zinc, are frequently used as the body material for metal mini check valves and ball valves. A major reason for this is brass performs well at temperatures ranging from about -325 to 425 °F (-198 to 218°C).

Equally important, the brass alloys used to make valve bodies can be quickly and accurately shaped using automated machining techniques. The result is that brass valve bodies are often the most economical and reliable miniature valve body material.

***The Difference Between Copper, Brass and Bronze from Metal Supermarkets* at YouTube**
(3:24)
A great introduction to the basic differences between copper and its major alloys.

Which brass alloy to use when making brass valves

When selecting a brass valve, the specific brass alloy used to make it can be important. This is because different brass alloys respond differently to different metal working techniques. This makes some brass valves suitable for some applications but not others. This article reviews some of the basic differences between cold drawn, extruded, forged and cast brass alloys used to make valves.

Note: As with most well-established technologies, brass forming has been around a long time. The result is there are now a large variety of ways to form and shape brass. This also means there is a large and at times confusing vocabulary used to describe brasses and the processes used to shape them.

***Copper and Its Alloys - Standards* from the Copper Development Association**
A useful summary of the most important national standards for copper alloys.

Why brass might be the best material choice for valve bodies

Brass has an excellent machinability so it can be used to make very small valves and threaded fittings. This also makes it versatile.

- Economical metal
- Excellent machinability
- Broad functional temperature range

4091 S. Eliot St., Englewood, CO 80110-4396
Phone 303-781-8486 I Fax 303-761-7939
industrialspec.com I ismedspec.com

- Good chemical and corrosion resistance
- Relatively easy and inexpensive to shape and form

***Machinability of Metals* at American Machinist**

This article describes, in some detail, the properties of metals that affect how easily they can be shaped by cutting tools.

Machinable brass is a great metal for making valve bodies

Overall, brass alloys used for miniature valve bodies are described as having good to excellent machinability. This means they can be rapidly and relatively easily shaped by automated, fast and therefore economical machining processes. Traditionally, brass alloys with good machinability make the best choice for miniature ball valve and check valve bodies because of the precise and detailed machining needed for all of the valve features. All of the highly machinable brass alloys used to make brass valve bodies are defined as wrought copper alloys.

What is a wrought copper alloy?

Brass is a copper alloy. As a group, wrought brasses have properties that make them suitable for various types of mechanical forming processes. These include

- Rolling
- Forging
- Extruding
- Cold drawing

All the wrought brass alloys used for valve bodies are also easily shaped by fast, automated machining into their final forms.

***Properties of Brass* at eMachineShop**

This is a list with simplified descriptions of the brass alloys most frequently found in common use.

What types of machining do valves typically require?

Whether a valve body is drawn, cast, forged or extruded, additional machining is required. This includes a combination of processes. Typical valve body machining can include these and more

- Boring
- Tapping
- Slotting
- Drilling
- Engraving
- Thread milling
- Corrosion scale removal
- Outer diameter (OD) work
- Inner diameter (ID) boring

A typical brass ball valve shown in cross section to show the valve's internal structure.

4091 S. Eliot St., Englewood, CO 80110-4396
Phone 303-781-8486 I Fax 303-761-7939
industrialspec.com I ismedspec.com

EXTRUDED, FORGED OR COLD-DRAWN BRASSES FOR MINIATURE VALVES

Why does it matter how brass stock is formed?

Brass must first be roughly shaped or preformed before the finished machining is done. It would require complex machining with many machining steps to produce a valve from a simple cube of brass. Plus, there is a lot of waste. Since check valves and ball valves can have relatively complex interior structures, starting with a piece of brass that is closer to the final shape of the valve (near-net shape) is the cheapest and easiest way to begin.

Types of "near-net" brass stock shape preforming used for valve bodies

- Cast brass
- Forged brass
- Cold drawn brass
- Extruded brass (either hot or cold extrusion)

Work hardening makes some brasses harder and stronger

Work hardening, also known as strain hardening, is what happens when brass is made stronger by plastic deformation. Plastic deformation and the resulting strengthening happens when the internal crystal structure of the brass is permanently changed. A number of economically important brass alloys that do not respond well to heat treatment can still be work hardened.

***Metallurgy Matters: The Structure of Metal* at The Fabricator**

An explanation of what metal grains and metal crystal structures are.

Cold-drawn brasses

Cold-drawn brass stock is specially shaped bar stock already at the required cross section of the part being produced. This makes it cheaper to machine because there is less waste and because it is already at or very close to the proper shape and diameter for the finished part. This type of brass bar stock is frequently described as near-net shape preform. This is because the stock comes already preformed at close to or near to the net or final shape of the part.

Cold-drawn cylindrical brass bar stock.

What is brass drawing?

Drawing brass is a metalworking process where brass is pulled or stretched. The metal is pulled into its desired shape and thickness. For brass valve bodies made of cold drawn brass, brass stock is usually drawn as a round bar. The technical name for what happens when brass is cold drawn is plastic deformation. The starting brass stock is drawn through a die to reduce its diameter and increase its length. For cold drawn brass, drawing is usually done at room temperature. This is classified as a cold working process.

EXTRUDED, FORGED OR COLD-DRAWN BRASSES FOR MINIATURE VALVES

Cold drawn cross-sections are more precise and have a better surface finish than hot extruded parts. Inexpensive materials can also be used instead of more expensive alloys to meet the same strength requirements. The work hardening or plastic deformation of cold drawn brass stock makes it stronger and harder.

Some typical miniature brass ball valves made of cold-drawn brass

- **BBV Series – 2-Way Ball Valves**
- **BBVC Series – 2-Way Brass Ball Valves**
- **BLV Series – Female NPT Ball Valves**
- **BVPM Series – Female NPT Ball Valves**

What is extruded brass stock?

Extrusion is a process that begins with brass that is either softened by heat (hot extruded) or at room temperature (cold extruded). The brass is then pushed through a die. Dies are extremely strong steel forms with shaped holes through them. Extruded brass is forced through a die to make shaped brass bars, flats or other shapes.

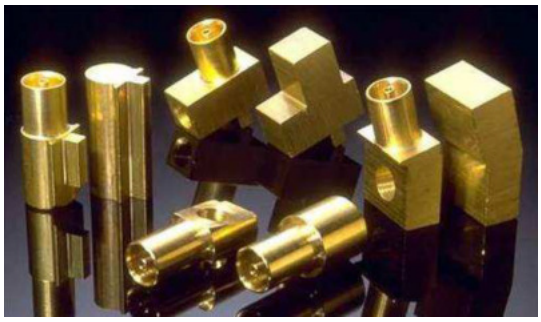

Typical extruded brass bar stock cut blanks by Vivek Tyagi.

The extrusion process is very similar to how pasta is made. The result is long rods or bars that are used as the raw material for forming into finished products. For two-way valve bodies, this bar stock is usually round, square or hexagonal (hex) shaped.

Generally, extruded brass used to make brass fittings and valves is especially useful because it can be cut into chunks or ‘blanks’ that are very close to the shape of the final part. These ‘near net’ shapes make it more economical to machine and finish extruded brass stock.

Cold-drawn brass extrusions and hot extruded brass stock have different characteristics.

Cold extruded brasses

Cold extrusion brass stock is extruded when the brass is at room temperature. Cold extruded brass has a better surface finish than hot extruded brass and the extrusion process strengthens the metal. Cold extruded bar stock also has a more accurate cross section.

Extruded brass bar stock can have a more complex or custom shape than is possible with cold-drawn brass. Cold extruded brass stock is cut to the near-net size of the finished valves and then machined to provide the details of the final valve design.

4091 S. Eliot St., Englewood, CO 80110-4396
Phone 303-781-8486 I Fax 303-761-7939
industrialspec.com | ismedspec.com

EXTRUDED, FORGED OR COLD-DRAWN BRASSES FOR MINIATURE VALVES

Why cold extruded brass is used for miniature valve bodies

- Very good dimensional accuracy
- Less cost and faster than cast brass
- Non-porous plus no pinholes or splits
- No seams or brazed joints like cast brass
- Strong because its denser and has a grain
- Its near-final shape reduces machining costs
- Better surface finish because no oxidation scaling unlike hot extrusion

The cons of cold extruded brass stock

- More expensive

Why hot extruded brass is used for miniature valve bodies

Hot extrusion is a technique where brass stock is formed at above the alloy's recrystallization temperature. It helps eliminate pores and voids in the material, breaks up inclusions that can cause weakness and recrystallizes the brass so that it has a finer grain.

Hot extruded brass is less expensive and faster to make than cast brass or cold extruded brass. Hot extrusion is not as precise as cold extruded brass. It also has surface oxidation that must be removed during the machining process.

Cast or molded brass blanks used for valve bodies

Casting uses molten metal to create the valve body. The brass is melted and poured into a mold. After the liquid metal cools down and solidifies it's removed from the mold. It then undergoes additional machining for threads and other valve features. Only certain brass alloys are suitable for both the casting and the machining processes used to produce valve bodies.

There are aspects of cast brass that make it less suitable for miniature valve bodies. The primary one is that it can have pin holes or voids and is generally more porous. Because of this, cast brass valves are unsuited for high pressure applications.

Brass valve casting by Rajshi Industries.

The advantages of cast brass for valve body blanks

- More complex shapes and patterns
- Cost-effective because of lower labor and machining costs
- Fewer secondary machining operations needed to finish the valve

4091 S. Eliot St., Englewood, CO 80110-4396
Phone 303-781-8486 I Fax 303-761-7939
industrialspec.com | ismedspec.com

EXTRUDED, FORGED OR COLD-DRAWN BRASSES FOR MINIATURE VALVES

Why extruded brass is better than cast brass for valve body blanks

- Increased hardness and strength
- Much less likely to contain voids and pores

***Extrusion Processes*, a SlideShare by Vivek Tyagi, Mechanical Engineer**
This is an excellent, in-depth review of extrusion and extrusion processes.

Forged brass

Forging brass is a brass shaping technique that uses heated chunks of brass stock. Since forging is a hot metal forming method, the brass alloys that work well for this are chosen for their good to excellent hot deformability performance.

Most brass valve forging processes begin with cutting brass bar stock into pre-cut cylindrical blanks or billets large enough for the valve body being made. These billets are then heated to the point where the brass becomes somewhat pliable. Each billet is then pressed in between dies or forms at very high pressure and squeezed into the basic shape of the valve body. After forging, any flash is trimmed away from the valve body. It is then sent off to have the fine features machined into it.

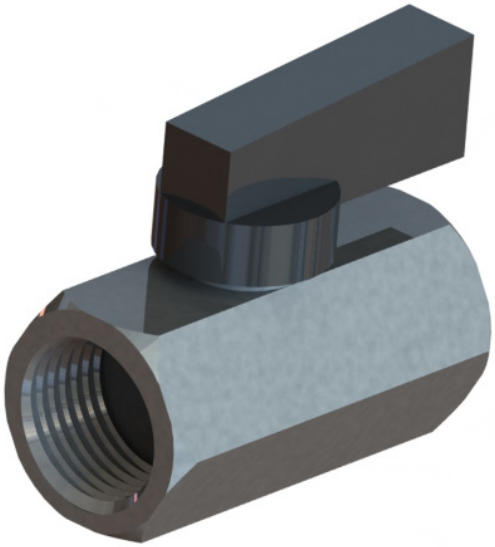

A BBVN series nickel plated brass two-way ball valve from ISM.

***Metal Forging* at The Library of Manufacturing**
Very detailed descriptions of industrial forging techniques including clear, simplified illustrations.

The advantages of forged brass valve bodies

- Higher strength
- Greater impact resistance
- Excellent surface finishing
- Closer tolerances than casting
- Resistant to cracking and shrinkage
- Can be heated and cooled more quickly
- Denser and non-porous which reduces the risk of leaks

The disadvantages of forged brass valve bodies

- More expensive to produce
- Less design flexibility than cast valves
- Mechanical properties are not as uniform

4091 S. Eliot St., Englewood, CO 80110-4396
Phone 303-781-8486 I Fax 303-761-7939
industrialspec.com I ismedspec.com

Some typical miniature brass ball valves made of forged brass

- **BV2SEL Series - 2-Way Safety Exhaust Locking Ball Valves**
- **BBVN Series – Mini Ball Valves**
- **BVC Series - Brass Ball Valves**
- **FBV Series - Forged Brass Mini-Ball Valves**

***Valve manufacturing process at Armatura Group* at YouTube**
This is a good video that includes some typical forging and machining processes used for making ball valves.

Keep an eye out for an upcoming blog post describing the qualities of some of the most popular brass alloys used to make miniature ball valve bodies.

- CA360 / C36000 extruded bar stock
- CA345 / C34500 extruded bar stock
- CA377 / C37700 forging brass stock
- C27450 lead free / low lead forging brass stock
- CW617N (similar to C37700) forging brass stock

Conclusion

As you can see, the brass metalworking techniques used to produce valves can be pretty complicated. Here are useful takeaways to remember about brass alloys used to make miniature check and ball valves.

- Brass is extremely useful as a valve body material
- Miniature brass valve features require elaborate and precise machining
- Brass for mini valves is first worked into basic shapes before being machined

Being aware of the basic differences between cold-drawn, hot extruded, forged and cast brass valve bodies makes it easier to understand cost and performance tradeoffs.

4091 S. Eliot St., Englewood, CO 80110-4396
Phone 303-781-8486 I Fax 303-761-7939
industrialspec.com I ismedspec.com

EXTRUDED, FORGED OR COLD-DRAWN BRASSES FOR MINIATURE VALVES

Some useful FAQs related to the brasses used to make valve bodies

What makes a brass alloy highly machinable?

Machinability describes how easily a metal can be cut or shaped by machine tools. Machinability is a major factor affecting a component's cost. The high machinability of brass is linked to its physical and mechanical properties. In particular, highly machinable brass produces small, nicely broken chips while it is being worked instead of continuous spirals of metal. These interfere with high speed machining. In general, highly machinable metals require very little power to cut, they can be cut quickly, it is easy to give them a nice finish and they don't wear out the cutting edges of the machine tools.

What is bar stock?

Bar stock a form of raw metal alloy that is used by forges and machine shops to make finished products. It is available in a variety of bar shapes (cross sections) and lengths but the most common shapes are round, square and hexagonal or hex. Bar stock is usually cut into brass chunks or billets for forging, machining or other metal shaping techniques.

What is forging brass?

Forging brasses are brass alloys that have excellent hot deformability performance. When they are at the right forging temperature, the metal is softened but not molten. They can then be stamped into their desired shapes without cracking or splitting. This stamping or forming is done using powerful hot forging presses capable of physically forcing the metal into the desired shape while it is still a solid.

What is cast brass?

Casting is a metal working process where molten metal is poured into a mold. This mold cools down and the metal solidifies. The solidified metal is then ejected from the mold. This solidified metal part is usually referred to as a casting. After being cast, parts usually go through additional finishing such as cleaning and machining. Casting is especially useful creating complex shapes that are difficult or expensive to make by other methods.

What is wrought brass?

Wrought brasses are a classification of copper alloys. Wrought brasses are first cast into ingots and then physically worked to obtain standardized, workable raw material stock. This raw stock is usually produced by drawing, extrusion or forging. Wrought brass alloys are usually marketed in the form of rods, bars, tubes, plates and so on. The most common process for producing bar stock is extrusion. Wrought brass usually has greater strength, hardness and stiffness when compared to cast brass.

What is extruded brass?

The brass extrusion process involves forcing metal through a die to produce a length of metal with a fixed cross section. A die is a tough steel tool that has a shaped hole or orifice through it that is smaller than the metal block being forced through it. The metal blocks used for the extrusion process are cast cylindrical pieces called billets. A ram supplies the compressive force that forces the billets through the die.

Why use extruded brass?

Extruded brass is produced by a process that relies primarily on compression. The resulting metal

4091 S. Eliot St., Englewood, CO 80110-4396
Phone 303-781-8486 I Fax 303-761-7939
industrialspec.com | ismedspec.com

has a very dense grain structure and excellent mechanical properties. Extrusion produces a more uniform, smoother surface finish. It also produces shaped rods with high dimensional accuracy. Using near-net shape extruded metal blanks for machining valve bodies means less waste and less use of machining resources.

What is brass hot extrusion?

In hot extrusion, brass billets or pre-cut cylindrical blanks are heated to the alloy's recrystallization temperature where it is neither too solid nor too loose. It is just right for feeding into the die. Hot extrusion helps eliminate pores and voids. It also helps to break up bits of oxides and contaminants that can weaken extruded metals.

What is brass cold extrusion?

Cold extrusion is done at or near room temperature. Brass billets or pre-cut cylindrical blanks are still fed into the die, but at a much cooler temperature. Cold extrusion helps prevent surface oxidation, increases the metal's strength and produces a nicer final finish.

Which is better for brass, hot extrusion or cold extrusion?

Depending on the brass alloy, hot or cold extrusion may be used. The choice of hot or cold extrusions is based on how a particular alloy will respond. Some brasses have better cold working characteristics and others perform better when hot forming techniques are used. Either way, extruded brass has excellent mechanical properties and can create significant savings by reducing the machining resources needed to produce finished valves.

What is cold drawn brass or cold drawing brass?

Cold drawn brass is produced by tensile force, essentially pulling the brass through a die. The machinery for drawing usually includes a series of machines. Each one has a die with a smaller hole or orifice than the previous one. Cold drawing is especially useful for producing rod shaped finished products. Cold drawn brass is noted for its close tolerances, smooth and scale-free surface, grain orientation, increased tensile strength and a higher point at which stress will cause it to stretch.

What is work hardening?

Work hardening, strain hardening or cold working describes a technique for strengthening metals. This is done by changing the shape of the metal without using heat. All metals, when they are below their melting point, form crystalline structures. For certain metals, the mechanical stresses generated by strain hardening cause permanent changes to this crystalline structure. These changes make the metal denser, harder and stronger.

What is plastic deformation of metals?

Plastic deformation of a metal happens when enough force is applied so that, without any cracking or fracturing, its shape or size is permanently changed. This change is reflected in small changes in density of the metal's crystalline structure. The result is a harder and stronger metal.

Some additional resources

***Brass Components Manufacturing* by Theonilde at YouTube**

Another great video showing modern brass component manufacturing techniques. This presentation

4091 S. Eliot St., Englewood, CO 80110-4396
Phone 303-781-8486 I Fax 303-761-7939
industrialspec.com | ismedspec.com

is especially notable for clips of modern high speed, automated machining.

***Copper and Its Alloys - Standards* from the Copper Development Association (UK)**
A useful summary of the most important national standards for copper alloys.

***The Difference Between Copper, Brass and Bronze from Metal Supermarkets* at YouTube**
A great introduction to the basic differences between copper and its major alloys.

***Extrusion Processes*, a SlideShare by Vivek Tyagi, Mechanical Engineer**
This is an excellent, in-depth review of extrusion and extrusion processes.

***Machinability of Metals* at American Machinist**
This article describes, in some detail, the properties of metals that affect how easily they can be shaped by cutting tools.

***Metal Forging* at The Library of Manufacturing**
Very detailed descriptions of industrial forging techniques including clear, simplified illustrations.

***Metallurgy Matters: The Structure of Metal* at The Fabricator**
An explanation of what metal grains and metal crystal structures are.

***Properties of Brass* at eMachineShop**
This is a list with simplified descriptions of the brass alloys most frequently found in common use.

***Standards and Specifications* at the Copper Development Association Inc. (USA)**
A reference links list to the most important national standards for copper alloys.

***Valve manufacturing process at Armatura Group* at YouTube**
This is a good video that includes some typical forging and machining processes used for making ball valves.

4091 S. Eliot St., Englewood, CO 80110-4396
Phone 303-781-8486 I Fax 303-761-7939
industrialspec.com | ismedspec.com

ISM Brass Ball Valves – Miniature Valves

BBV Series – 2-Way Ball Valves

NPT female or male thread-by-thread or thread-by-barbed connections. Buna-N, EPDM, Viton or neoprene seals. Brass or nickel plated brass body. Handle options include zinc die cast lever or black nylon T-handle. 500 psi maximum operating pressure and 180° F maximum operating temperature.

BBVC Series – 2-Way Brass Ball Valves

NPT female or male thread-by-thread, thread-by-barbed and barbed-by-barbed connections. Buna-N, EPDM, Viton or neoprene seals. Brass body. Handle choices are zinc die cast lever or black nylon T-handle. 500 psi maximum operating pressure and 180° F maximum operating temperature.

BBVN Series – Mini Ball Valves

1/8", 1/4", 3/8", 1/2" and 3/4" male-by-female or female-by-female NPT threaded connections. Viton® seals. Teflon® seats. Nickel plated brass or 316 stainless steel valve bodies. Blowout proof stems. Nylon handle. Pressure rated 450 psi WOG (brass) and 800 psi WOG (stainless steel) maximum non-shock pressure. Temperature rated to 330° F (brass) and 350° F (stainless steel).

BLV Series – Female NPT Ball Valves

Two and 3-Way ball valves. Brass or nickel plated brass valve bodies. Supplied with one brass knurled nut and one brass hex nut for panel mount applications. 500 psi maximum operating pressure and 180 °F maximum operating temperature.

BVC Series – Brass Ball Valves

1/4", 3/8", 1/2", 3/4", 1", 1-1/4", 1-1/2" and 2" NPT female-by-female threaded connections. Teflon® seals and seats. Full port forged brass body. Blowout proof stems. Quarter turn heavy duty plated carbon steel handle. 600 psi WOG maximum non-shock pressure. 150 psi WSP, SWP or maximum steam working pressure. Operating temperature range is -22° F to 302° F.

BVPM Series – Female NPT Ball Valves

Brass two and three-way ball valves. 1/8", 1/4", 3/8" or 1/2" female NPT threaded connections. Blowout-proof stem. Teflon® ball seats. Nickle plated brass ball. 29” Hg to 1500 psig WOG, or maximum non-shock pressure with ambient temperature water, oil or gas. Double O-ring Viton® stem seals: primary Viton, Aflas® secondary. Temperature rated at 10º F to 350º F.

BV2SEL Series – Two-Way Safety Exhaust Locking Ball Valves

1/4", 3/8", 1/2", 3/4", 1", 1-1/4", 1-1/2", 2", 2-1/2" and 3" female by female NPT threaded connections. Brass body. PTFE seals and seats. Blowout proof stem with adjustable packing. Locking handle. Temperature rated at -35° F to 150° F. Pressure rated at 29" Hg to 125 psig air, cold non-shock.

FBV Series – Forged Brass Mini-Ball Valves

Thread by thread or hose barb by hose barb connections. Double Buna-N O-rings and a Teflon® seat. Brass body. 180° turn steel handles. 200 psi WOG or maximum non-shock pressure with ambient temperature water, oil or gas.

ISM Metal Check Valves

4091 S. Eliot St., Englewood, CO 80110-4396
Phone 303-781-8486 I Fax 303-761-7939
industrialspec.com I ismedspec.com

EXTRUDED, FORGED OR COLD-DRAWN BRASSES FOR MINIATURE VALVES

Ball Check Valves

- *CPP Series - Thread x Barb Check Valves*
- *COP Series - Compression x Male NPT Check Valves*
- *CVHP Series - High Pressure Check Valves*
- *CVB Series - Ball Check Valves*
- *CSB Series - Female UNF Check Valves*
- *CHHB Series - NPT Check Valves*
- *COFB Series - Nipple Check Valves*

Piston Check Valves

- *CS Series - Female NPT Check Valves*
- *CHH Series - Female x Male NPT Check Valves*
- *CVA Series - Mini Check Valves*
- *COF Series - Nipple Check Valves*
- *CVAM Series - Barb x Barb Check Valves*

Poppet Check Valves

- *CHHP Series - Check Valves*
- *COFP Series - Nipple Check Valves*
- *CSP Series - Female Check Valves*
- *CSP Series - 5000 psi Check Valves*

Most metal flow control and fluid management components are also available in brass or plated brass. Here are some broad categories of parts from ISM that have brass material options.

Metal Fittings

Metal Quick Couplings

Manual Retractable Sleeve Pneumatic Quick Couplings / Disconnects

4091 S. Eliot St., Englewood, CO 80110-4396
Phone 303-781-8486 I Fax 303-761-7939
industrialspec.com | ismedspec.com